arXiv:2112.03503v1 [quant-ph] 7 Dec 2021

Comment on "Multi-output quantum teleportation of different quantum information with an IBM quantum experience"

Satish Kumar
email: satishphysics94@gmail.com

September 9, 2024

Jaypee Institute of Information Technology, A 10, Sector 62, Noida, UP-201309, India

Abstract

Recently, Yu et al., (Commun. Theor. Phys. **73** (2021) 085103) has proposed a scheme for "multi-output quantum teleportation" and has implemented the scheme using an IBM quantum computer. In their so called multicast-based quantum teleportation scheme, a sender (Alice) teleported two different quantum states (one of which is a m-qubit GHZ class state and the other is a $(m+1)$-qubit GHZ class state) to the two receivers. To perform the task, a five-qubit cluster state was used as a quantum channel, and the scheme was realized using IBM quantum computer for $m = 1$. In this comment, it is shown that the quantum resources used by Yu et al., was extensively high. One can perform the same task of two-party quantum teleportation using two Bell states only. The modified scheme for multi-output teleportation using optimal resources has also been implemented using IBM quantum computer for $m = 1$ and the obtained result is compared with the result of Yu et al.

1 Introduction

Quantum teleportation scheme was first introduced by Bennett et al. in 1993. In their pioneering work, they proposed a scheme for teleporting an unknown qubit using a maximally entangled Bell state [1]. Since then many teleportation schemes have been proposed and many variants of teleportation (e.g., remote state preparation (RSP), quantum secret sharing (QSS), quantum information splitting (QIS), bidirectional teleportation (see [2, 3] and references therein)) have also been introduced. Recently Yu et al. [4] have proposed a scheme for the teleportation of two different quantum states to two different receivers. Specifically, in their scheme, Alice wants to teleport a state

$$|\chi_a\rangle = \alpha_1|0\rangle^{\otimes m} + \beta_1|1\rangle^{\otimes m} \tag{1}$$

and an another state

$$|\chi_b\rangle = \alpha_2|0\rangle^{\otimes (m+1)} + \beta_2|1\rangle^{\otimes (m+1)} \tag{2}$$

to Bob_1 and Bob_2, respectively using a five qubit-cluster state

$$|\psi\rangle_{12345} = \frac{1}{2}(|00000\rangle + |01011\rangle + |10100\rangle + |11111\rangle)_{12345}. \tag{3}$$

In their work, Yu et al. have referred to state $|\chi_a\rangle$ as m-qubit state of GHZ class and analogously $|\chi_b\rangle$ as $(m+1)$-qubit state of GHZ class. We have some reservation about using this nomenclature and would prefer to name these states as generalized Bell-type state as was logically done in several earlier works [5, 6]. In fact, in Ref. [5], it was explicitly shown that any quantum state of the from $\alpha|x\rangle + \beta|\bar{x}\rangle : |\alpha|^2 + |\beta|^2 = 1$ where x varies from 0 to $2^n - 1$ and $\bar{x} = 1^{\otimes n} \oplus x$ in modulo 2 arithmetic, can be teleported using a Bell state. Clearly, the states considered by Yu et al. (i. e., $|\chi_a\rangle$ and $|\chi_b\rangle$) are of the form $\alpha|x\rangle + \beta|\bar{x}\rangle$ and it's obvious that $|\chi_a\rangle$ and $|\chi_b\rangle$ can be independently teleported to two receivers using two Bell states. Thus, the use of a five qubit-cluster state or any such complicated quantum channel is not required to perform the multi-output teleportation task considered by Yu et al.

Extending the above observation, it will be apt to note that a generalized scheme for teleportation has been reported in [7], where it is mentioned that teleportation of a quantum state having m-unknown coefficients require $\lceil \log_2 m \rceil$ Bell states.

The scheme proposed by Yu et al., is essentially meant for teleportation of a product state $|\psi_{ab}\rangle = |\chi_a\rangle \otimes |\chi_b\rangle$ having four unknown coefficient α_1, β_1, α_2, and β_2 and hence require only $\lceil \log_2 4 \rceil = 2$ Bell states to perform the teleportation task. In fact, the scheme of [7] allows one to teleport more general quantum states using two Bell states. Interestingly, despite the existence of these general results, several authors have recently reported different type of teleportation schemes using excessively higher amount of quantum resource. For example, in Ref. [8] a four qubit cluster state is used as a quantum resource for teleporting two qubit states. The two qubit states used for teleportation is

$$|\lambda\rangle_{ab} \quad = \quad \alpha|00\rangle + \beta|01\rangle + \gamma|10\rangle + \delta|11\rangle. \tag{4}$$

Now, as per the scheme reported in [7] and the references therein, since there are four unknown coefficients in the state to be teleported, it will be sufficient to use$\lceil \log_2 4 \rceil = 2$ Bell states. The discussion so far is sufficient to establish that the resources used in Yu et al., paper are not optimal and we could have concluded this comment here, but the fact that they have realized their scheme for $m = 1$ using IBM quantum experience have motivated us to explicitly implement our scheme scheme for $m = 1$ with the help of a quantum computer whose cloud-based access is provided by IBM.

The paper is organized as follows. Our scheme for multi-output teleportation using two Bell states is described in Sec. 2. Subsequently, the implementation of the scheme using an IBM quantum computer and the relevant results are reported in Sec. 3. Finally, the paper is concluded in Sec. 4.

2 Multi-output quantum teleportation using two Bell states

In 2017, Yu et al., coined the term multi-output quantum teleportation [4] in an effort to propose a scheme that allows Alice to teleport two different single qubit states $|\chi_1\rangle$and $|\chi_2\rangle$ to two different receivers using a four qubit cluster state $|\psi\rangle_{A_1A_2B_1B_2}$. In the original scheme, Alice used to keep the first two qubits (indexed by subscripts $A_1$and A_2) of the cluster state with herself and sends the other two qubits to the two receivers, say Bob_1 and Bob_2 (qubits sent to Bob_i is indexed by B_i). Now, Alice does a measurement in the cluster basis on first four qubits $|\psi_i\rangle_{12A_1A_2}$, two of which are information qubits and the other two are the qubits which Alice kept with her. The measurement result is publicly announced and the two receivers applies the corresponding unitary operators to obtain the corresponding desired states $|\chi_1\rangle$ and $|\chi_2\rangle$, respectively. Almost in the similar line, in 2021, Yu et al., proposed another scheme for multi-output quantum teleportation, but this time the states to be teleported were m-qubit and $(m+1)$-qubit states (cf. Eqs. (1) and (2) and the related discussions in the previous section) and the quantum channel used was a five-qubit cluster state (see Eq. 3). We have already mentioned that the same multi-output teleportation task can be done using two bell states. As the experimental part of Yu et al. is restricted to $m = 1$ case, for comparison, in Fig. 1, we explicitly show the schematic of the quantum circuit that will be required for performing the task using two Bell states. Let $|\chi_a\rangle$ and $|\chi_b\rangle$ be the two states to be teleported (Eqs. (1) and (2) for $m = 1$). The state $|\chi_b\rangle$ can be reduced to a simpler state $|\chi_b'\rangle$ after applying a unitary operation CNOT with control on first qubit and target on second qubit. Now the problem reduces to the teleportation of the product state of $|\chi_a\rangle$ and $|\chi_b'\rangle = \alpha_2|0\rangle + \beta_2|1\rangle$ as

$$CNOT|\chi_b\rangle \quad \longrightarrow \quad |\chi_b'\rangle|0\rangle = (\alpha_2|0\rangle + \beta_2|1\rangle) \otimes |0\rangle. \tag{5}$$

3 Experimental realization using an IBM quantum computer

We have designed a simple (but experimentally realizable using IBM quantum experience) circuit shown in Fig. 2 (a) which is equivalent to the schematic of the circuit shown in Fig. 1 except the presence of the first and last CNOT gates. Local operations performed by these two CNOT gates do not affect the main teleportation part. This circuit is run in IBM quantum composer to yield the results reported in the following subsection. There is another reason for implementing the circuit without the CNOT gates, as that allowed us to use ibmq_casablanca which is a seven qubit quantum computer that has enough resources to implement the circuit shown in Fig. 2 (a), but not enough qubits to implement the technically equivalent circuit shown in Fig. 1. The ibmq_casablanca is one of the IBM Quantum Falcon processors [9]. The circuit given in Fig. 2 (a) can be briefly described as a process in which Alice wants to teleport $\frac{1}{\sqrt{2}}(|0\rangle+|1\rangle)\otimes\frac{1}{\sqrt{2}}(|0\rangle + |1\rangle) = |+\rangle \otimes |+\rangle$ to the receivers Bob_1 and Bob_2, respectively as the first CNOT in Fig. 1 can transform the Bell state $|\phi^+\rangle = \frac{1}{\sqrt{2}}(|00\rangle + |11\rangle)$ to separable state $\frac{1}{\sqrt{2}}(|0\rangle + |1\rangle) \otimes |0\rangle$ and the last CNOT can recreate it at the receiver's end with the help of an ancilla qubit and output of the teleportation process. In Fig. 2 (a), first two qubits are the information qubits and the last four qubits are the quantum channels used for the teleportation, which is comprised of two Bell states as desired and argued above as sufficient resource. Now Alice does a Bell measurement on first (Q_1) and third qubits (Q_0) and another Bell measurement on second (Q_5) and fifth qubits (Q_4) and then sends the

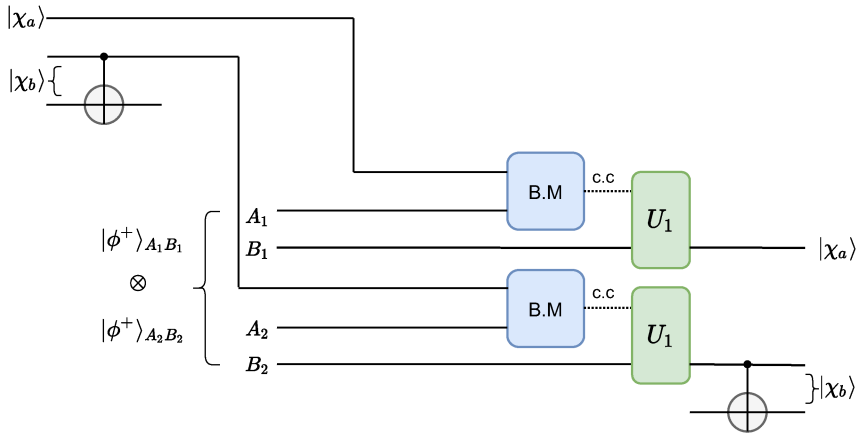

Figure 1: (Color online) An optimal quantum circuit illustrating a multi-output quantum teleportation scheme

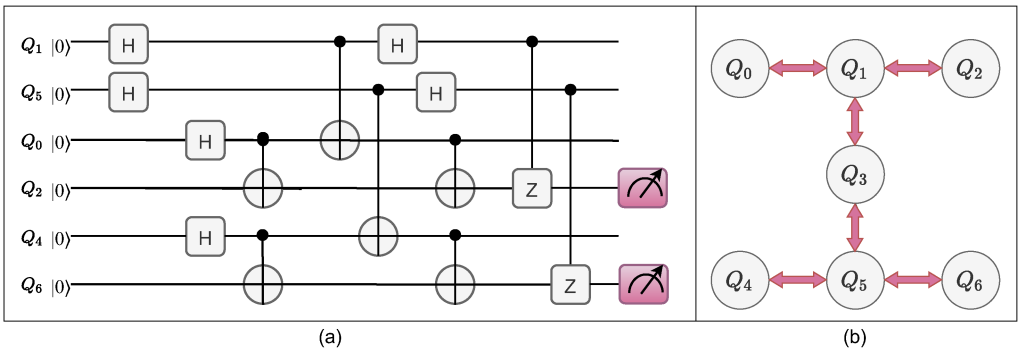

Figure 2: (Color online) (a) Quantum circuit for the teleportation of the states $\frac{1}{\sqrt{2}}(|0\rangle + |1\rangle)$ and $\frac{1}{\sqrt{2}}(|0\rangle + |1\rangle)$ to two different receivers Bob_1 and Bob_2 simultaneously using 2 Bell states $|\phi^+\rangle^{\otimes 2}$ (b) Topology of ibmq_casablanca.

measurement results to Bob_1 and Bob_2. Here it may be noted that qubit numbers are indexed in accordance with the convention adopted by IBM Quantum experience in describing the 7 qubit quantum computer whose topology is shown in Fig. 2 (b). Further, the qubits are chosen such that the circuit after transpilation has a minimal circuit cost [10]. According to the measurement results announced by Alice, Bob_1 and Bob_2 apply corresponding unitaries to obtain the teleported states. Clearly this is just two independent implementation of the standard teleportation circuit, and the same is enough to achieve what is done using costly quantum resources in the earlier works.

3.1 Results

The circuit described above is run using ibmq_casablanca which is a 7 qubit superconductivity based quantum computer that uses transmon qubits. The obtained result is illustrated in Fig 3. As we teleported $|+\rangle|+\rangle$ it was expected that in output states $|00\rangle, |01\rangle, |10\rangle$ and $|11\rangle$ would appear with equal probability, but from Fig. 3 we can see that the states are produced with slightly different probabilities, the same is also depicted in the corresponding density matrix shown in Fig. 4. This is because of the inherent implementation errors as summarized in Table 1. Fidelity between the state produced and the expected state is computed using the formula $F(\sigma, \rho) = Tr\left[\sqrt{\sqrt{\sigma}\rho\sqrt{\sigma}}\right]^2$, where σ is theoretical (expected) density matrix of the final state and ρ is the density matrix of the experimentally obtained final state. The fidelity is obtained as 84.64 % for the case illustrated here for a particular set of experiment comprised of 8192 runs of the experiment. To check the consistency of the result the same exercise is repeated 10 times and the fidelities are obtained as (in %) 77.51, 84.64, 79.31, 78.98, 76.17, 81.33, 83.64, 80.21, 74.65, 79.92. The standard deviation is 3.096. This is a reasonably accurate result and the fidelity is quite high compared to the classical limit of 2/3. This simply establishes that resources used in the earlier works were not optimal. Fidelity can not be compared with the earlier work, as Yu et al., have not reported that. However, it's obvious that simpler entangled states used here will be affected less by the noise.

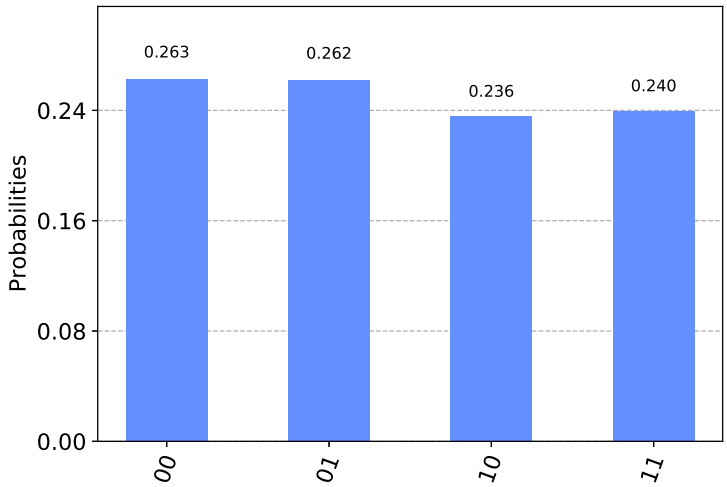

Figure 3: (Color online) Experimental result for the quantum circuit shown in Fig 2.

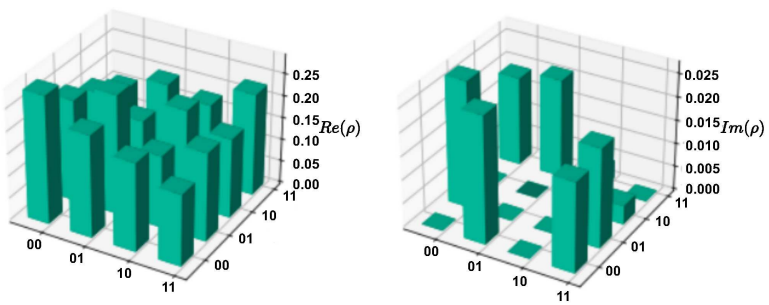

Figure 4: (Color Online) Experimental quantum state tomography result for the circuit shown in Fig 2.

Qubit	T1 (μs)	T2 (μs)	Frequency (GHz)	Readout assignment error	Single-qubit Pauli-X-error	CNOT error
Q_0	97.07	41.56	4.822	3.52×10^{-2}	2.73×10^{-4}	cx0_1: 1.105×10^{-2}
Q_1	179.27	106.63	4.76	1.56×10^{-2}	1.56×10^{-4}	cx1_3: 6.796×10^{-3}, cx1_2: 1.013×10^{-2}, cx1_0: 1.105×10^{-2}
Q_2	164.86	96.43	4.906	8.50×10^{-3}	3.54×10^{-4}	cx2_1: 1.013×10^{-2}
Q_3	123.23	151.27	4.879	1.70×10^{-2}	3.40×10^{-4}	cx3_1: 6.796×10^{-3}, cx3_5: 1.139×10^{-2}
Q_4	128.4	54.14	4.871	3.06×10^{-2}	2.88×10^{-4}	cx4_5: 1.148×10^{-2}
Q_5	133.5	91.77	4.964	9.60×10^{-3}	3.17×10^{-4}	cx5_3: 1.139×10^{-2}, cx5_4:1.148×10^{-2}, cx5_6: 1.156×10^{-2},
Q_6	112.08	166.07	5.177	2.18×10^{-2}	4.70×10^{-4}	cx6_5:1.156×10^{-2}

Table 1: Calibration data of ibmq_casablanca on Dec 01, 2021.cxi_j represents CNOT gate with control qubit i and target qubit j.

4 Conclusion

It's shown that quantum resources used in Yu et al., [11] for multiparty teleportation was not optimal and the same drawback exists in [8] and other similar works. Relevant existing results are noted and it's explicitly shown that ibmq_casablanca can be used to implement the task described by Yu et al., using only two Bell states. Here the purpose was only to show that cluster state and similar resources are not required for performing this type of tasks, and consequently we have restricted ourselves to simplest possible implementation of the multi-output quantum teleportation. It's obvious to extend this approach for the multioutput teleportation of more complex quantum states.

Acknowledgment:

Author acknowledges the support from the QUEST scheme of Interdisciplinary Cyber Physical Systems (ICPS) program of the Department of Science and Technology (DST), India (Grant No.: DST/ICPS/QuST/Theme-1/2019/14 (Q80)). He also thanks Anirban Pathak for his feedback and advises in relation to the present work.

References

[1] C. H. Bennett, G. Brassard, C. Crépeau, R. Jozsa, A. Peres, and W. K. Wootters, "Teleporting an unknown quantum state via dual classical and Einstein-Podolsky-Rosen channels," *Physical Review Letters*, vol. 70, no. 13, p. 1895, 1993.

[2] A. Pathak, *Elements of quantum computation and quantum communication*. CRC Press Boca Raton, 2013.

[3] V. Sharma, C. Shukla, S. Banerjee, and A. Pathak, "Controlled bidirectional remote state preparation in noisy environment: a generalized view," *Quantum Information Processing*, vol. 14, no. 9, pp. 3441–3464, 2015.

[4] Y. Yu, X. W. Zha, and W. Li, "Quantum broadcast scheme and multi-output quantum teleportation via four-qubit cluster state," *Quantum Information Processing*, vol. 16, no. 2, p. 41, 2017.

[5] A. Pathak and A. Banerjee, "Efficient quantum circuits for perfect and controlled teleportation of n-qubit non-maximally entangled states of generalized Bell-type," *International Journal of Quantum Information*, vol. 9, pp. 389–403, 2011.

[6] P. Panigrahi, M. Gupta, A. Pathak, and R. Srikanth, "Circuits for distributing quantum measurement," in *AIP Conference Proceedings*, vol. 864, pp. 197–207, American Institute of Physics, 2006.

[7] M. Sisodia, A. Shukla, K. Thapliyal, and A. Pathak, "Design and experimental realization of an optimal scheme for teleportation of an n-qubit quantum state," *Quantum Information Processing*, vol. 16, no. 12, p. 292, 2017.

[8] S. Rajiuddin, A. Baishya, B. K. Behera, and P. K. Panigrahi, "Experimental realization of quantum teleportation of an arbitrary two-qubit state using a four-qubit cluster state," *Quantum Information Processing*, vol. 19, no. 3, p. 87, 2020.

[9] "IBM Quantum," *https://quantum-computing.ibm.com/*, 2021.

[10] G. W. Dueck, A. Pathak, M. M. Rahman, A. Shukla, and A. Banerjee, "Optimization of circuits for IBM's five-qubit quantum computers," in *2018 21st Euromicro Conference on Digital System Design (DSD)*, pp. 680–684, IEEE, 2018.

[11] Y. Yu, N. Zhao, C.-X. Pei, and W. Li, "Multi-output quantum teleportation of different quantum information with an IBM quantum experience," *Communications in Theoretical Physics*, vol. 73, p. 085103, 2021.